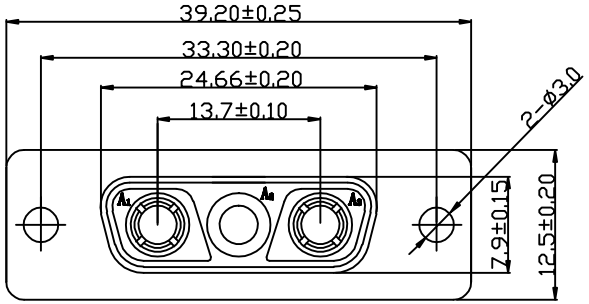

MATERIALS AND FINISH

SHELL : STEEL MATERIAL, TIN FINISHED
DIMPLES ON PLUG ONLY
CONNECTOR INSULATOR : PBT THERMOPLASTIC,
30% GLASS FILLED, UL 94V-0 RATED, BLACK COLOR
PUBLIC AND HIGH-POWER CONACT MALE : BRASS, 3u"/5u"/10u" GOLD PLATED
PUBLIC AND HIGH-POWER CONACT FEMALE : COPPER, 3u"/5u"/10u" GOLD PLATED

ELECTRICAL CHARACTERISTICS

HIGH POWER CONTACT CURRENT RATING : 10,20,30R040 AMPS
HIGH POWER CONTACT RESISTANCE : 2.7 MILLIOHMS MAX.
DIELECTRIC WITHSTANDING VOLTAGE :
1000 V AC FOR 1 MINUTE
INSULATION RESISTANCE : 5000 MEGAOHMS MIN.
TEMPERATURE RATING : -55°C ~ +125°C

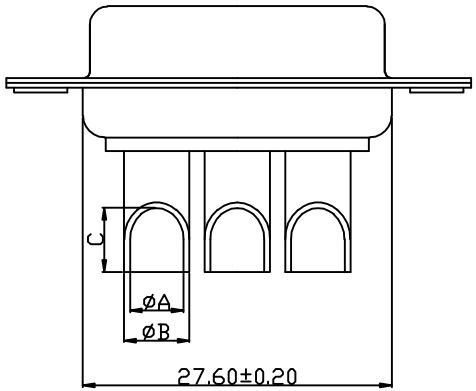

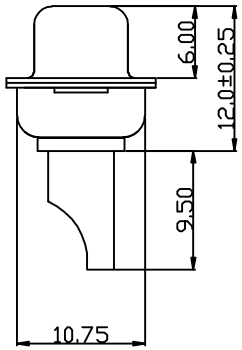

N□	A±0.10	B±0.10	C±0.10	适配线规	电流强度(A)
2	1.7	2.5	4.5	14#~16#	10AMPS
4	2.7	3.6	5.0	10#~12#	20AMPS
6	3.4	4.4	5.5	8#~10#	30AMPS
8	4.6	5.6	5.5	6#~8#	40AMPS